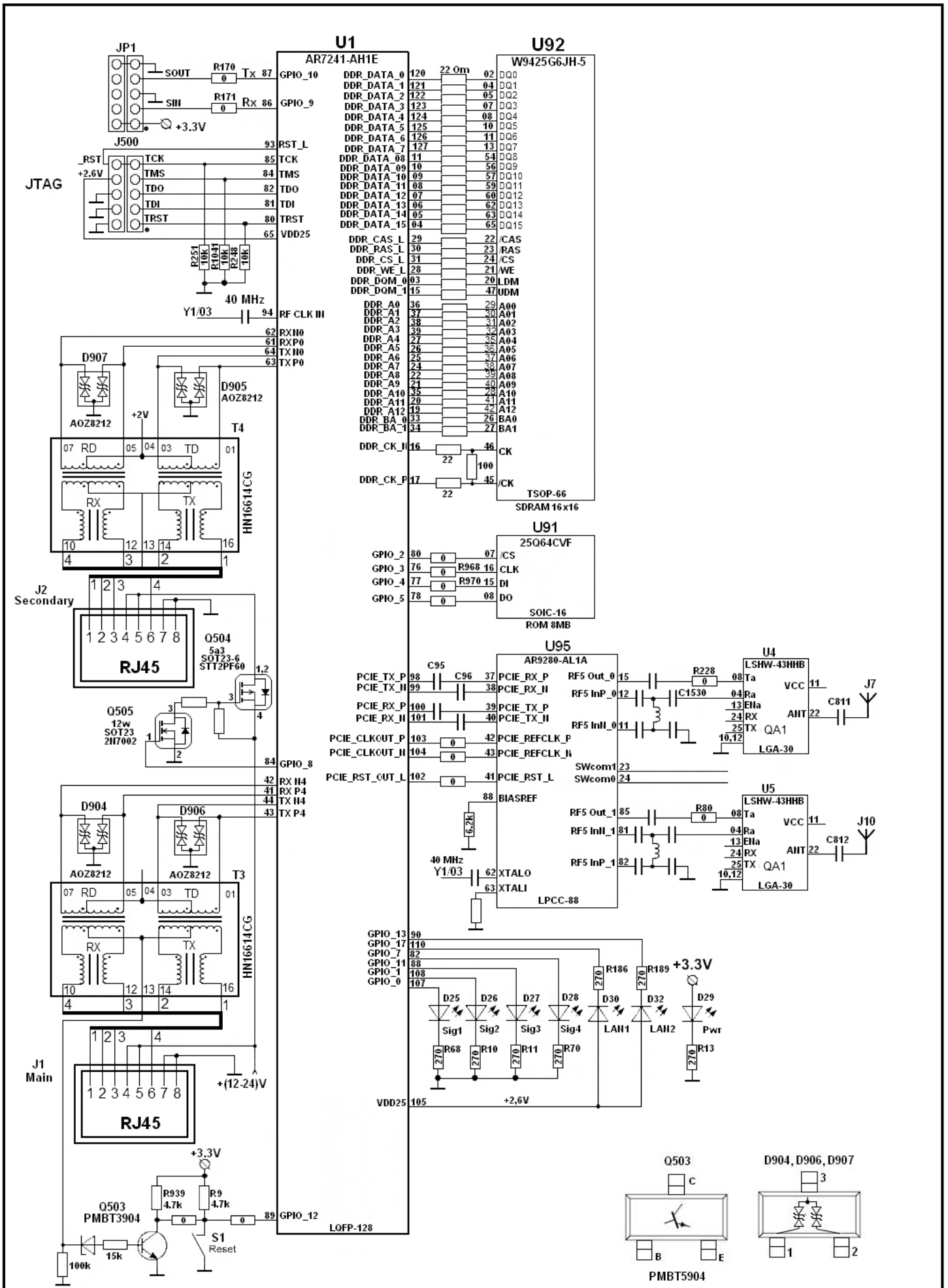

modifications		date	name	description	pages 2
date	name			**Ubiquiti Nanostation M5** revers	
20.08.2020	kkk				page no. 2

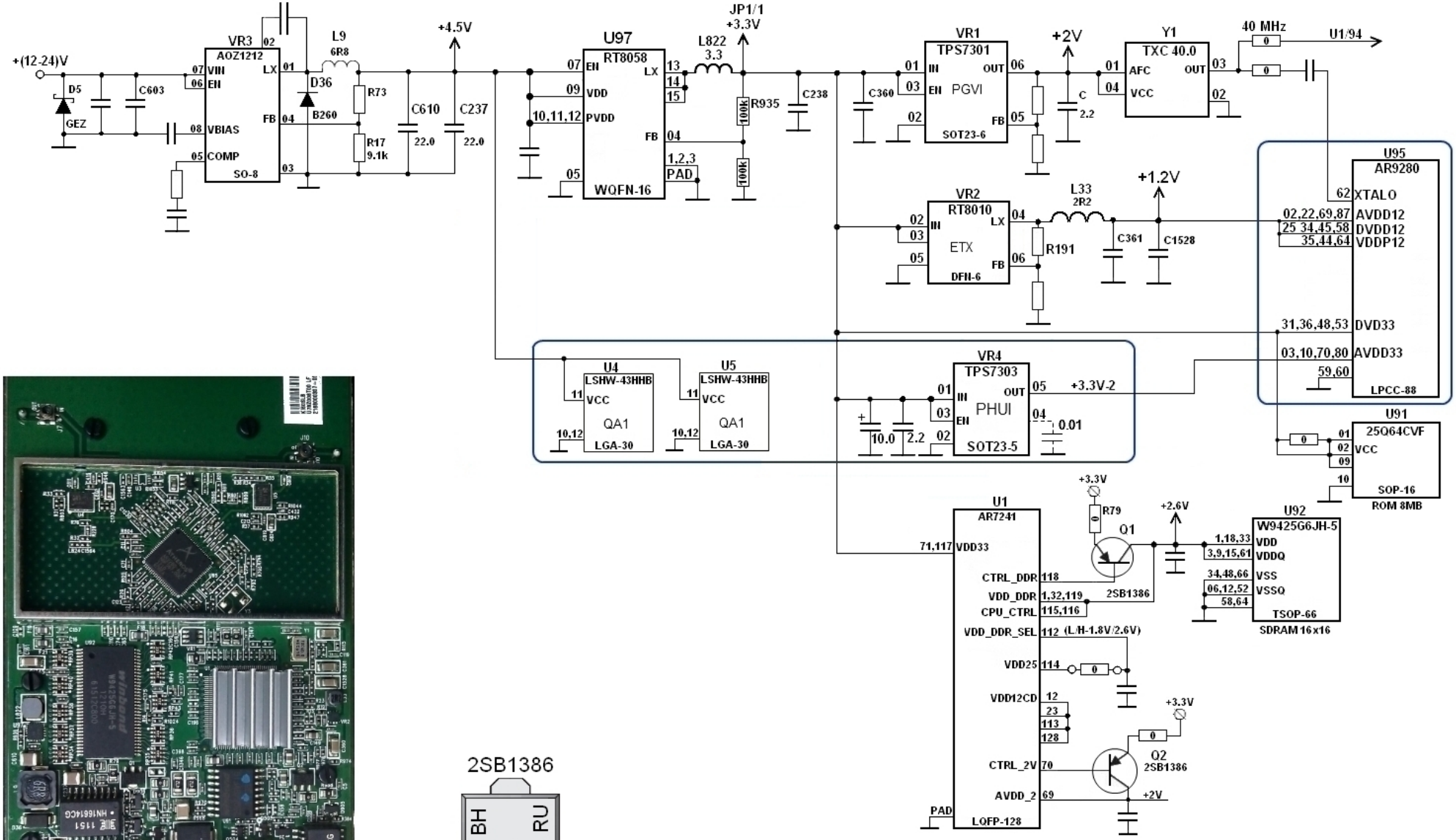

modifications			date	name	description	pages
date	name				**Ubiquiti Nanostation M5** revers	2
20.08.2020	kkk					page no.
					diagram no. 1	**1**